CANYCOM

Your CANYCOM-Dealer: Consultation • Sales • Service

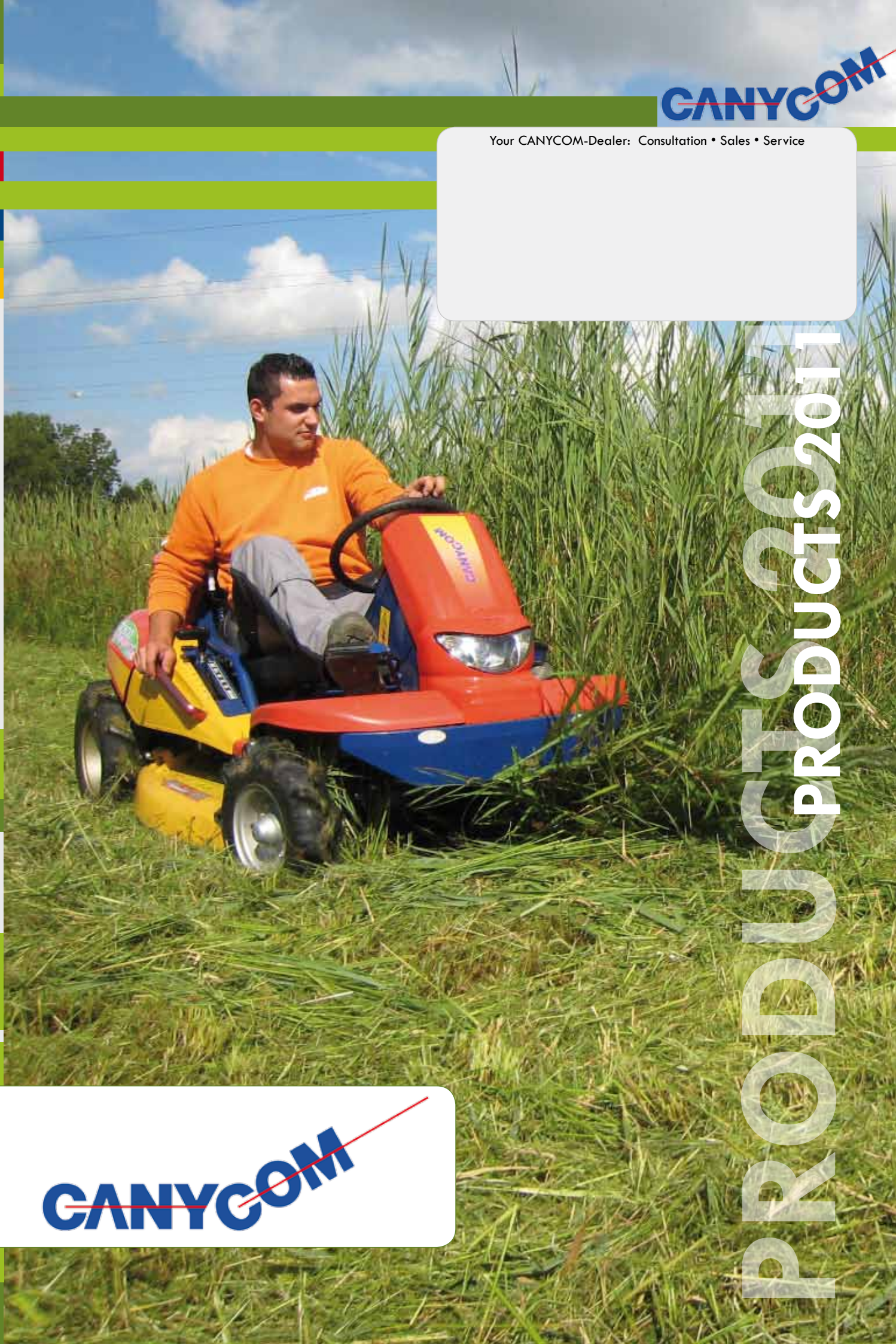

PRODUCTS 2011

CANYCOM

CHIKUSUI CANYCOM, INC.
90-1 Fukumasu, Yoshii-machi
Fukuoka 839-1396
Japan
Phone: +81 943 75 21 95
Fax: +81 943 75 43 96
E-Mail: office@canycom.co.jp

Canycom Office Europe
A- 1040 Vienna, Schwindgasse 11/10
Mobile: +43 699 16 300 311
s_fukahori@canycom.co.jp

E-Mail: office@canycom.org
www.canycom.org

A company name that states the founders goals

The combination of the 7 characters of the alphabet of CANYCOM can be interpreted as, "a company that cultivates happiness and carries satisfaction to customers."

A company name that expresses our goals

The meaning of CANYCOM's seven character name is derived from the expression CAN CARRY ANY COMMUNICATION. It is charged with the intent of our company goals

Hitoshi Kaneyuki
PRESIDENT

RED ITTOUSAI

High frequency quenched and tempe-red blade.

Durable blade with hardened tip.

Designed for rough yards.

SILVER HIROSAKI

Sharper and more durable than the Red Ittousai because of its trapezoid shape.

Blades can be used in a fixed position for cutting brush.

This blade is suitable for cutting high grass.

HEARTFULL HIROSAKI

Features 2 blades thus leaving less uncut grass behind!

Trapezoid shaped blade is sharp and durable.

Able to cut a wide range of brush from tough to softer grass. Can be used in free swinging or fixed mode.

BLACK BASIC BLADE

Reinforced high frequency quenched blade.

For cutting soft grass.

The free swingback blade can be used in a fixed position using fixing bolts.

2 WD | KEY FEATURES

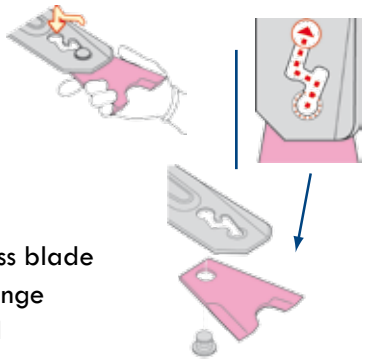

toolless blade exchange step 1

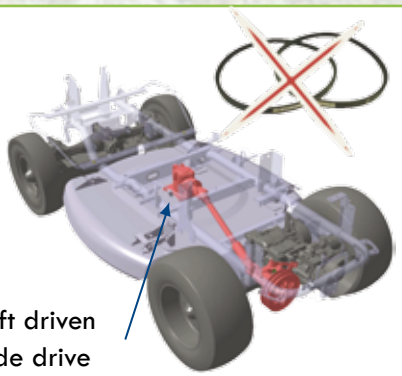

Shaft driven blade drive

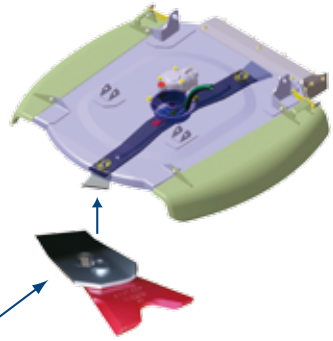

step 2

On demand permanent Diff.-Lock system

Deck washing system "easy clean"

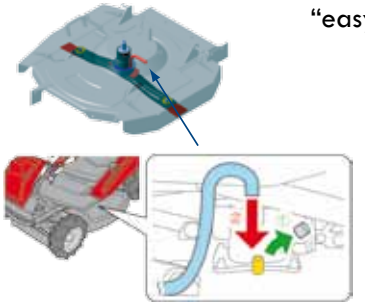

Simple hand lever system with cruise control

KEY FEATURES | 4WD

On demand
permanent Diff.-Lock system

Oil cooler

Safety lighting system

Toolbox

Shaft Driven 4WD

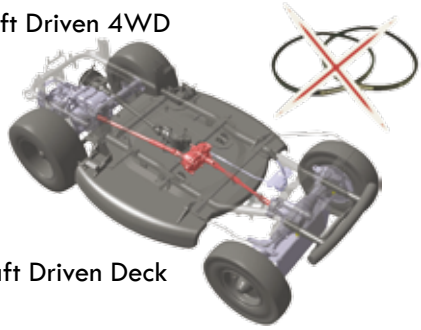

Shaft Driven Deck

Front Brake System

Simple hand lever system
with cruise
control

Deck washing system
"easy clean"

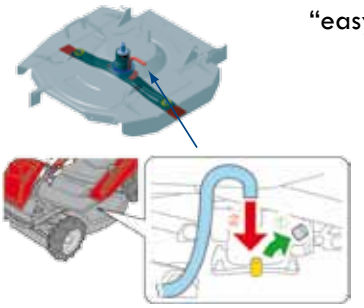

additional foot pedal

SPECIAL FEATURES

Spacious sitting area 1261 mm

Easy to open engine cover

L x W x H in mm	1796 x 985 x 850
Wheel distance	1230 mm
Tread in mm:	F: 820, R: 735
Ground distance	105 mm
Engine	Subaru Robin EX40
Max. Output	10,3 kW/14,0 HP
Start system	Electro start
Fuel	Petrol
Fuel capacity	7 Liter
Weight	240 kg
Rated cutting summary	7.000 m^2/h
Steering	Adjustable, 2-Wheel
4 WD	-
HST	„Hydro-Gear“ BDR 319
HST-Oil	20W 50
Diff.-Lock	-/Yes
Oil cooling system	-
Speed	F: 0-10 km/h, R: 0-7 km/h
Turning radius	950 mm
Gradeability	15° / 33% all axles
Front Wheel	AGR 3.50-7", 2PR
Rear Wheel	16 x 7.00-8", 4PR
Cutting width	915 mm
Cutting height	0 - 65 mm (5 steps)
Sliding deck feature	-
Blade Type	Swinging Blade
Cutting Deck Adjustment	Manual
Cutting Deckt	Shaft driven

CM 141 RCD | PRIVATE 2WD

powered by

SUBARU

Robin Industrial Products

max height
835 mm

low gravitational point
420 mm

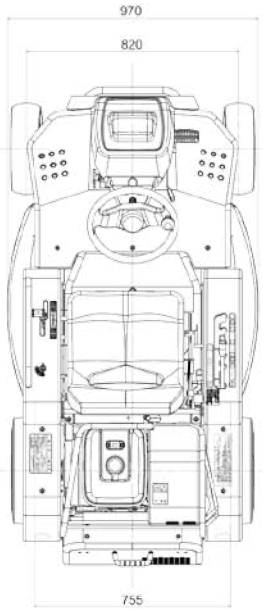

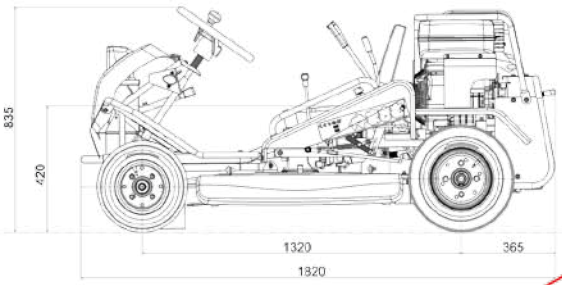

CANYCOM

SPECIAL FEATURES

Shaft driven blade drive

Accelerator can be operated by left hand lever or foot pedal and features cruise control.

front wheel brake

Oil cooler

L x W x H in mm	1947 x 1020 x 860
Wheel distance	1300 mm
Tread in mm:	F: 860, R: 800
Ground distance	130 mm
Engine	Subaru Robin EH 65 Auto-Choke
Max. Output	16.4 kW/ 22.0 PS
Start system	Electro start Auto-Choke
Fuel	Petrol
Fuel capacity	20 Liter
Weight	325 kg
Rated cutting summery	8.000 m²/h
Steering	Adjustable, 2-Wheel
4 WD	-
HST	„Hydro-Gear“ BDR-319
HST-Oil	20W 50
Diff.-Lock	Yes (powershifting)
Oil cooling system	5 Liter
Speed	F: 1. 0-8 km/h, 2. 0-14 km/h R: 0-6.0 km/h
Turning radius	420 mm
Gradeability	15° / 33% all axles
Front Wheel	AGR 4.00-7“, 4PR
Rear Wheel	17x8.00-8“, 4PR
Cutting width	975 mm
Cutting height	0 - 150 mm (21-steps)
Sliding deck feature	-
Blade Type	Swinging Blade
Cutting Deck Adjustment	Manual (Gas cylinder)
Cutting Deck	Shaft driven

CM 226/ CM 225 previous model | PROFI 2WD

NEW!

Mower deck opens outward to the side for easy blade exchange

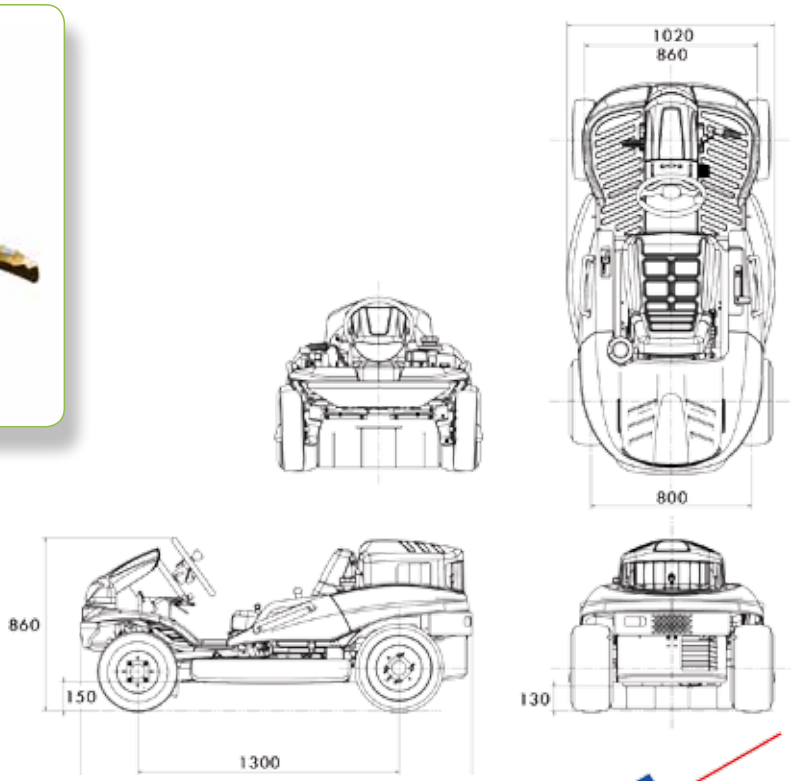

Cutting height from 0 to 150 mm
(21 Steps)

Adjustable steering height
Telescoping steering wheel

Big 20 liter tank- work a whole day

sliding cutting height lever

blade clutch lever

fully adjustable suspension seat

Shaft Driven 4WD

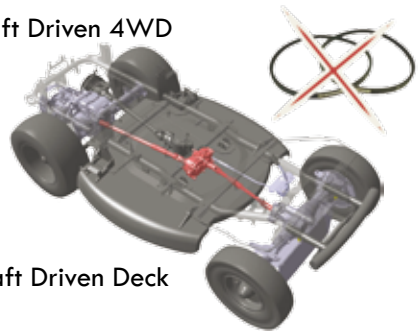

Shaft Driven Deck

F1 SPECIAL FEATURES

MORE SPACE FOR GRASS

NEW BUILDING METHOD

The brush cutter front is positioned high off the ground to keep from bending back grass up to 236 mm high. This leaves a cleaner cut finish and less uncut grass.

CIRCUMFERENCE DIAMETER 35CM

Front wheels turn up to a 75° angle & inside rear wheel brakes

*CMX227 only in 2WD-Mode

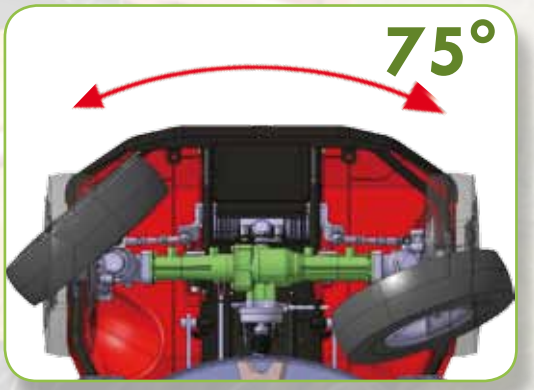

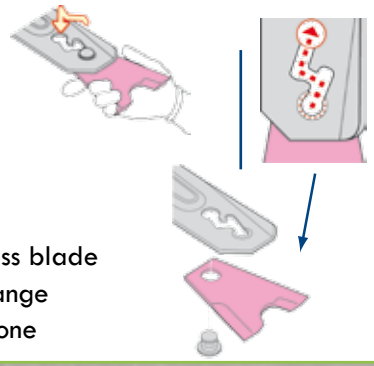

toolless blade exchange step one

LESS TURNING RADIUS

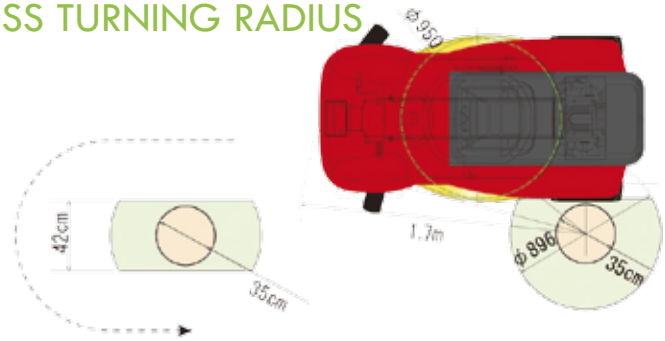

SPECIAL FEATURES

Shaft driven cutting deck and AWD

Accelerator can be operated by left hand lever or foot pedal and features cruise control.

front wheel brake

Oil cooler

L x W x H in mm	1947 x 1020 x 860
Wheel distance	1300 mm
Tread in mm:	F: 860, R: 800
Ground distance	130 mm
Engine	Subaru Robin EH 65 Auto-Choke
Max. Output	16.4 kW/ 22.0 PS
Start system	Electro start Auto-Choke
Fuel	Petrol
Fuel capacity	20 Liter
Weight	345kg
Rated cutting summery	8.000 m²/h
Steering	Adjustable, 2-Wheel
4 WD	yes on demand
HST	„Hydro-Gear“ BDR-319
HST-Oil	20W 50
Diff.-Lock	Yes (powershifting)
Oil cooling system	5 Liter
Speed	F: 1. 0-8 km/h, 2. 0-14 km/h R: 0-6.0 km/h
Turning radius	900 mm in
Gradeability	25° / 55% all axles
Front Wheel	AGR 4.00-7“, 4PR
Rear Wheel	17x8.00-8“, 4PR
Cutting width	975 mm
Cutting height	0 - 150 mm (21-steps)
Sliding deck feature	-
Blade Type	Swinging Blade
Cutting Deck Adjustment	Manual (gas cylinder)
Cutting Deck	Shaft driven

CMX 227 / CMX 224 previous model | PROFI 4WD

powered by SUBARU
Robin Industrial Products

NEW!
Mower deck opens outward to the side for easy blade exchange

not CMX 224

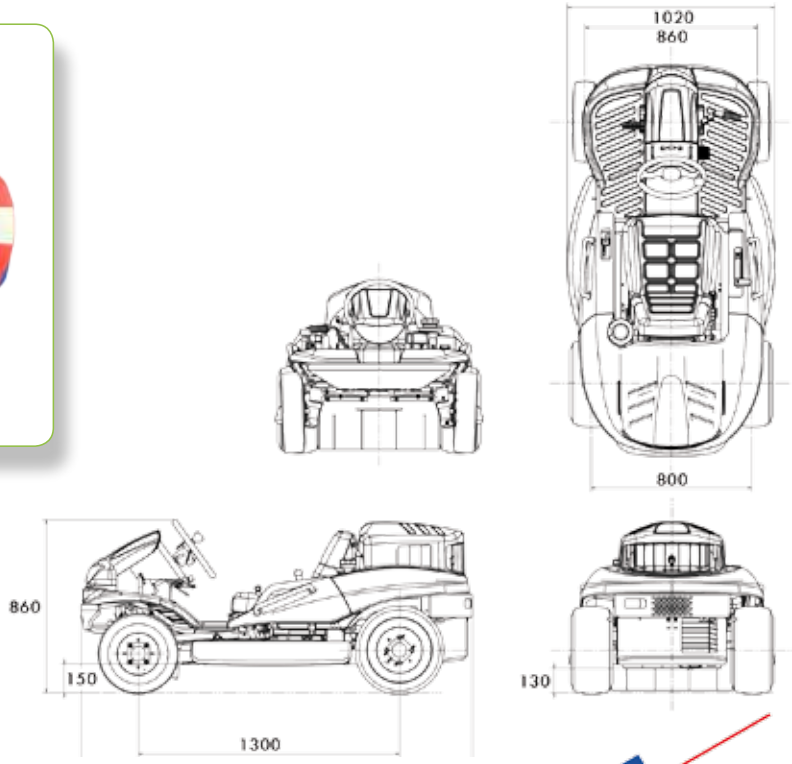

CANYCOM

CM 223 | PROFI 2WD

Blade deck lifts up to 200 mm for easier movement over hurdles

SPECIAL FEATURES

180 mm Cutting height

Safety lighting system

Toolbox

Heartfull Hirosaki - mulching blade for much more efficient cutting see page 3

all wires, bearings, etc. covered by seal-system

L x W x H in mm	1980 x 1040 x 940 / 1970 x 1040 x 920
Wheel distance	1365 mm /1370 mm
Tread in mm:	F: 810, R: 780 / F:830, R:870
Ground distance	145 mm / 125 mm
Engine	Subaru Robin EH65 Auto-Choke
Max. Output	16.4 kW (22.0 HP)
Start system	Electro start Auto-Choke
Fuel	Petrol
Fuel capacity	14,5 Liter
Weight	355 kg / 330 kg
Rated cutting summary	10.000 m²/h
Steering	Adjustable, 2-Wheel
4 WD	Yes (on demand system CMX 222)
HST	„Kanzaki“ 168H37-29001
HST-Oil	20W 50
Diff.-Lock	Yes (powershifting)
Oil cooling system	8 Liter
Speed	F: 1. 0-7.5 km/h, 2. 0-12.1 km/h R: 0-6 km/h
Turning radius	990 mm / 950 mm
Gradeability	25° / 55% all axles / 15° / 33% all axles
Front Wheel	AGR 4.00-8“, 2PR / AGS 4.00-7“, 2PR
Rear Wheel	19x8.00-10“, 4PR / 17x8.00-8“, 4PR
Cutting width	975 mm
Cutting height	0 - 180 mm (stepless) / 0 - 160 mm (stepless)
Sliding deck feature	-
Blade Type	Swinging Blade
Cutting Deck Adjustment	Manual (Gas cylinder)
Cutting Deckt	Shaft driven

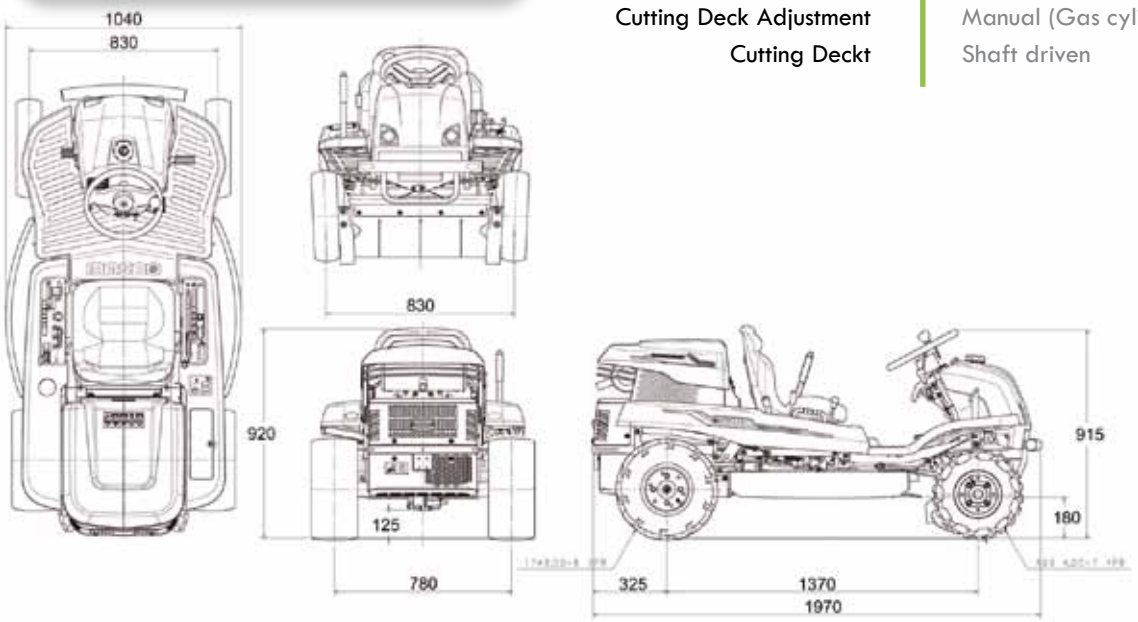

CMX 222 | PROFI 4WD

ROPS System available

powered by SUBARU
Robin Industrial Products

Height and length adjustable on seat

Adjustable steering height
Telescoping steering wheel

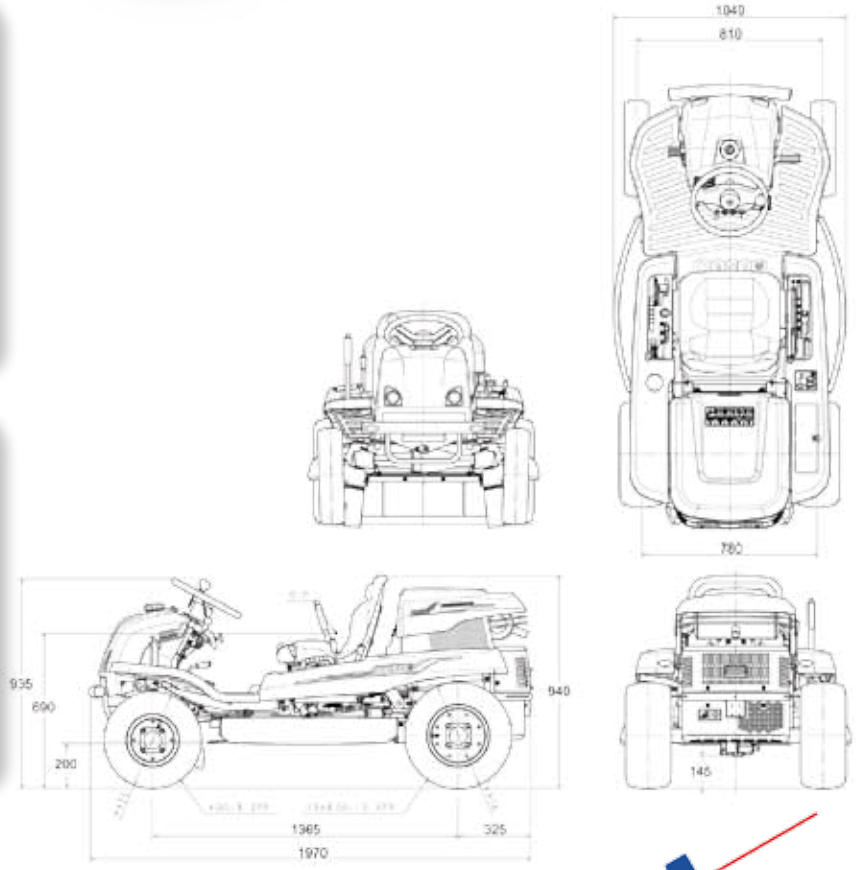

CANYCOM

All Wheel Drive

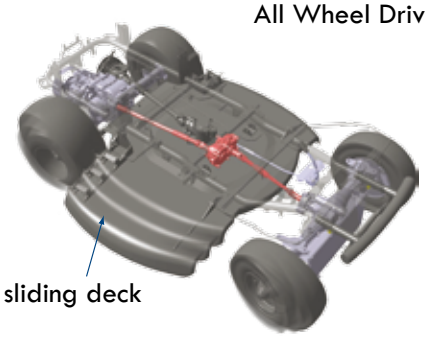

Durable mulching blade

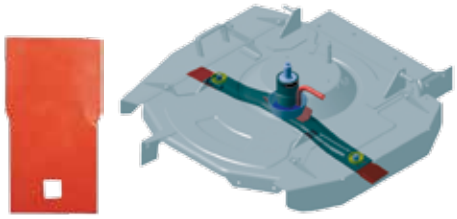

L x W x H in mm	2065 x 1110 x 1010
Wheel distance	1460 mm
Tread in mm:	F: 810, R: 900
Ground distance	115 mm
Engine	Kawasaki FH 641 V
Max. Output	15.7 kW/ 21.0 HP
Start system	Electro start
Fuel	Petrol
Fuel capacity	15 Liter
Weight	415 kg
Rated cutting summary	9.000 m²/h
Steering	Adjustable, 4-Wheel
4 WD	Yes (permanent)
HST	„Hydro-Gear“ BDR-321
HST-Oil	20W 50
Diff.-Lock	Yes (powershifting)
Oil cooling system	8 Liter
Speed	F: 1. 0-6.7 km/h, 2. 0-10 km/h R: 0-6 km/h
Turning radius	950 mm
Gradeability	25° / 55% all axles
Front Wheel	AGR 4.00-7“, 2PR
Rear Wheel	17x8.00-8“, 4PR
Cutting width	900 mm
Cutting height	20 - 100 mm (electric)
Sliding deck feature	Yes 150 mm right side
Blade Type	Swinging Blade
Cutting Deck Adjustment	electric
Cutting Deckt	Shaft driven

CM 2103 | PROFI 4WD

Canopy available

powered by Kawasaki

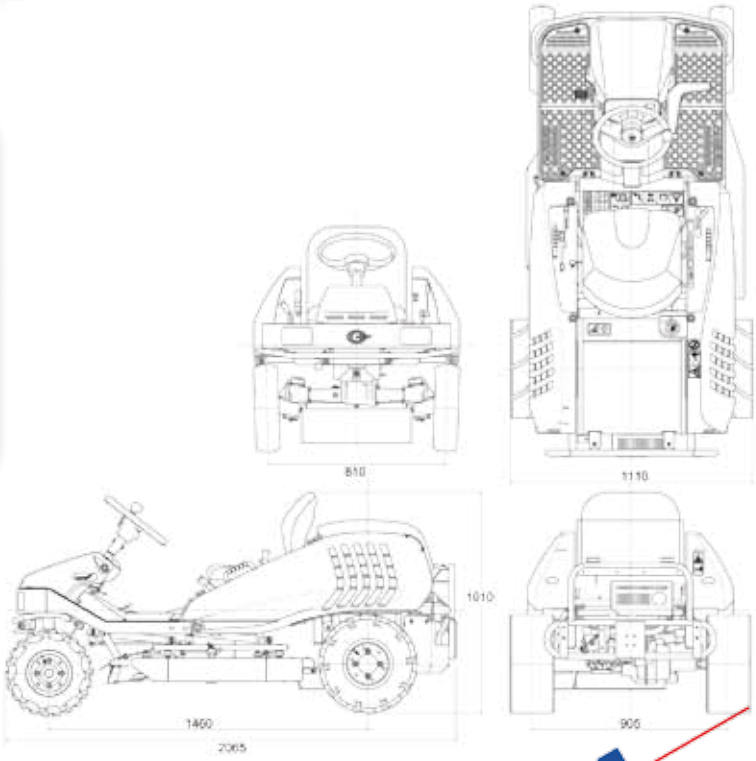

OPTIMAL BRAKE POWER

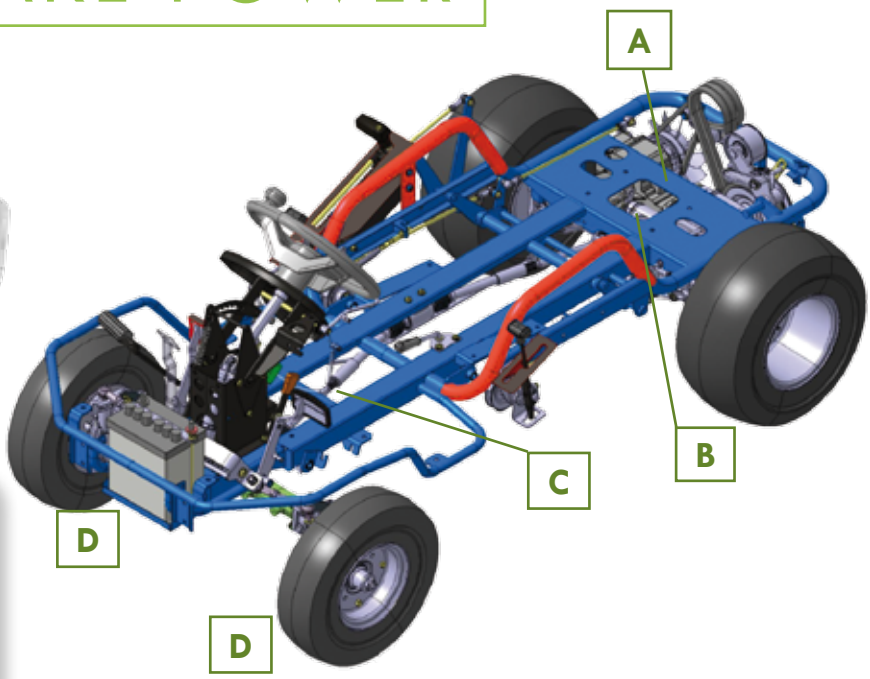

SYSTEM A

Hydrostatic brake system
by radial piston pump

all models

SYSTEM B

mechanical brake system at the rear transmission. Controlled by separate brake pedal.

all models

SYSTEM C

internal brake system on front wheel shaft transmission. Controlled by separate brake pedal.

4WD models
CMX222, CMX227 (similar CMX224)

SYSTEM D

Two internal brake systems directly assembled at the front wheels. Controlled by separate brake pedal.

model CM 226 (similar CM 225)

	System A	System B	System C	System D
CM 141	●	●		
CM 223	●	●		
CM226	●	●		●
CMX 222	●	●	●	
CMX 227	●	●	●	
CM2103	●	●		

low traction on rear axle

30°

full traction on front axle
= optimal brake power

The rear transmission offers little traction on an incline of more than 30% (66,7%) as all weight shifts to the front of the wheels.

To avoid braking trouble on such slopes CANYCOM has developed front broke systems (System C and D).

PERFECT PROFI POWER

ROBIN EX 40 OHC

low noise
low vibrations
more power
less emissions
Splash lubrication (for extreme incline)

powered by SUBARU
Robin Industrial Products

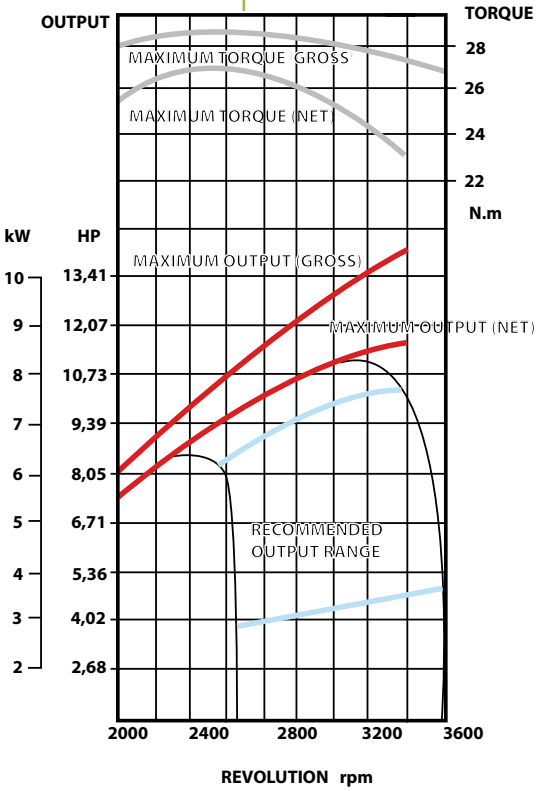

ROBIN EH 65

low noise
low vibrations
less gas consumption
electronical ignition
autochoke
Pressure lubrication (for extreme incline)

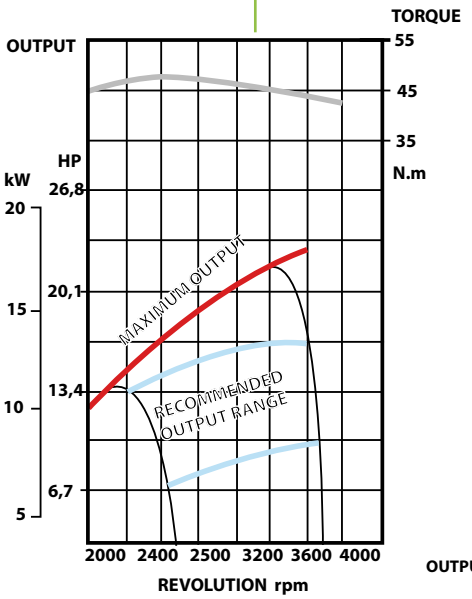

powered by Kawasaki

KAWASAKI FH 641

low noise
low vibrations
less gas consumption
electronical ignition
Pressure lubrication (for extreme incline)

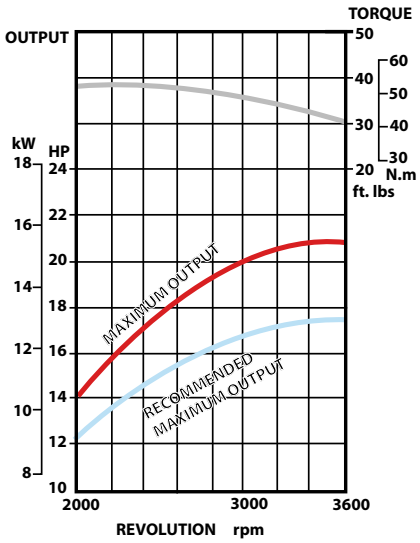

CG 431 | Bush Cutter George

powered by Kubota

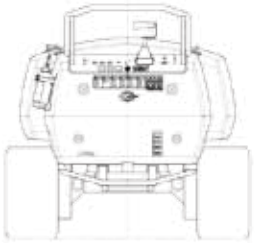

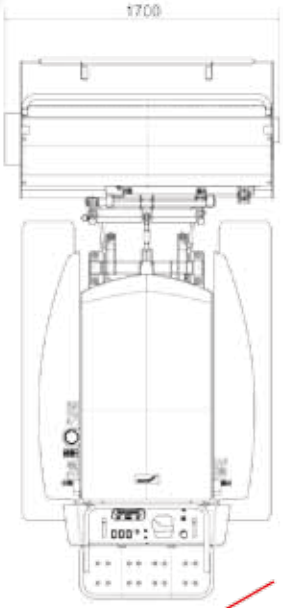

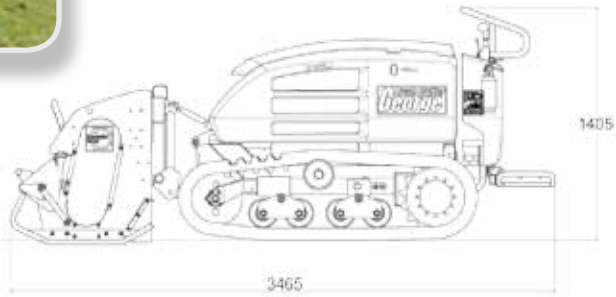

CANYCOM

Overall L x W x H in mm	3465 x 1700 x 1405
Machine Weight	2000 kg
Engine	Kubota
Engine Type	V2203
Max. Output	32.9 kW (44.8 PS)/2600 rpm
Transmission	Hydraulic
Number of Gears /Forward	HST (Variable Speed)
Number of Gears /Reverse	HST (Variable Speed)
Max. Speed	0~9 km/h
Min. Speed	0~6 km/h
Min Ground Clearance	280 mm
Rubber Track width	320 mm
Tread	1170 mm
Track Ground Contact	1345 mm
Gradeability	35°
Ground Pressure	0.24 kgf/cm^2
Cutting Width	1545 mm
Cutting Height	-20~320 mm
Drum revolution adjustable	yes (0-2100 RPM)
Amount of Slide	500 mm
Adjusting Height	Hydraulic
Blade Type	80 (pairs) Y-blades
Fuel	Gasoil
Fuel capacity	52 liter
Oil capacity	42 liter
PTO Oilflow	92 liter/min
PTO Pressure	210 bar

KUBOTA V2203

Pressure lubrication
(for extreme incline)

Emission:
EPA intermim Tier 4/3A

Durability maximized by water channel between the cylinders

Kubota E-TVCS
(Ecology - Three Vortex Combustion System)

MoS2 coated pistons

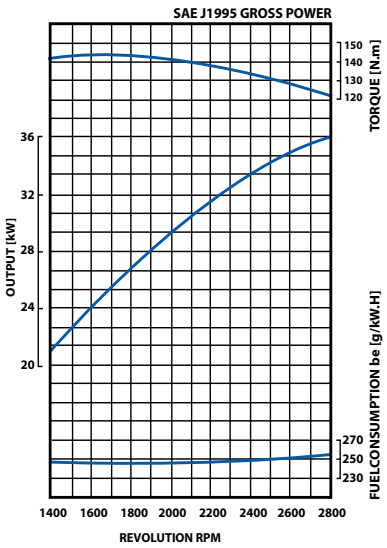

Reversing Fan
Self-cleans and prevents over heating

Rotor Head Slides
50 cm to the right for working next to dangerous areas or next to fences

Heavy-Duty Undercarriage

Mower drum revolution adjustable

0 to 2100 RPM

PTO Linkage

Sliding Rotor Head

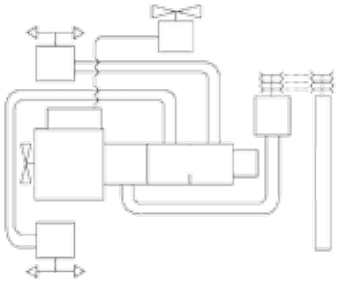

Only drum transmission by belt
3 belts = 1 transmission

Hydraulically-driven Flail Knife Drum

Self-leveling system

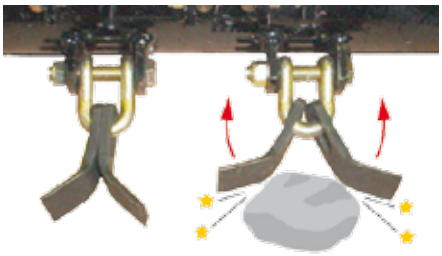

80 pairs of Y-blades deflect obstacles from all directions = less damage to blades

FIND THE RIGHT MACHINE

CANYCOM

Is your job site on a slope ?

NO

Is your work site rough and uneven?

Do you need to cut bush over 1 meter tall?

Do you cut bush more than 5 times a year?

YES

Is having a tight turning radius important to you?

Can you take advantage of a 1545 mm wide machine?

45 HP — CG 431 PROFI

35° — Bush Cutter George

Cutting width: 1545 mm
Cutting height: -20~320 mm

14 HP — CM 141 PRIVATE

15°

Cutting width: 915 mm
Cutting height: 0~65 mm

22 HP — CM 223 PROFI

HST OIL COOLING — 15°

Cutting width: 975 mm
Cutting height: 0~160 mm

22 HP — CM 226 PROFI

HST OIL COOLING — 15° — 42 cm

Cutting width: 975 mm
Cutting height: 0~150 mm

22 HP — CMX 227 PROFI

HST OIL COOLING — 25° — 42 cm

Cutting width: 975 mm
Cutting height: 0~150 mm

22 HP — CMX 222 PROFI

HST OIL COOLING — 25°

Cutting width: 975 mm
Cutting height: 0~180 mm

21 HP — CM 2103 PROFI

HST OIL COOLING

4WS — 25°

Cutting width: 900 mm
Cutting height: 20~100 mm